Rally Bar 2 | Power Adaptor

Logitech Confidential
All dimensions in millimeter
Scale 1:1

Process Black
Clear

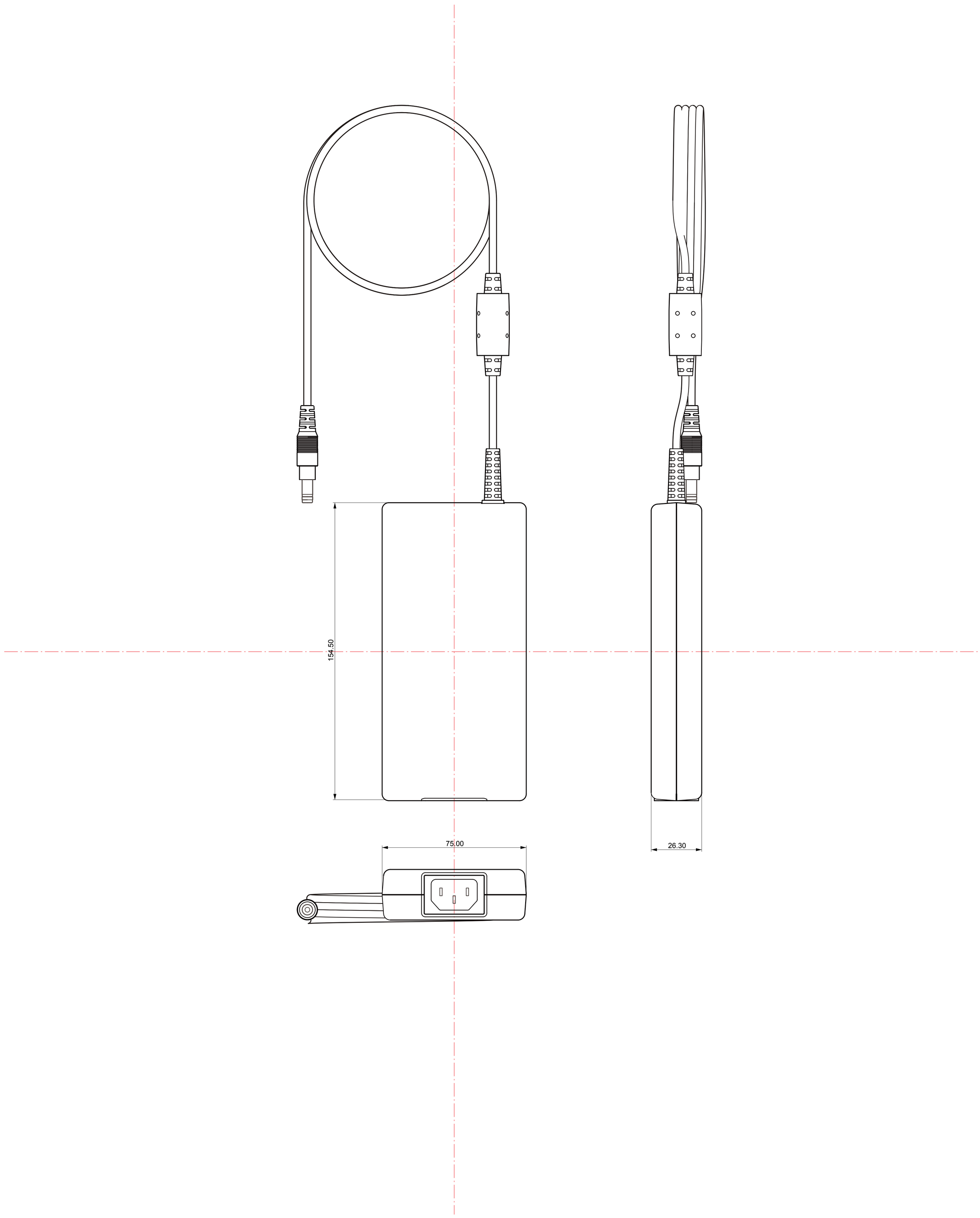

V01 - DSP - 260624 - Document creation
CHANGE LOG